Abest Electric | Product User Manual |

AS-PW1/BA Intelligent Water Pump Controller

ABEST ELECTRIC CO.,LTD.

All copyrights reserved. No reproduction

All information about the AS-PW1/BA Intelligent Water Pump Controller, including software, appearance, circuit board design and the user manual. Which is owned by Abest Electric Co., Ltd. (hereinafter referred to as "the Company"). Without the Company permission, any company and individual shall not be imitated,copy,extracted and duplicated. Otherwise the Company shall have the right to pursue the responsibility of the parties.

The contents of the user manual mentioned is for reference only.
The software may be changed or upgraded without prior notice.
For more details, please visit the Company's website or contact the Company directly.

If there is any error on the user manual,the Company has no obligation to take any responsibility for it.

Version number: V1.02

Issued in June 2025
Abest Electric Co., Ltd

Product description

Single intelligent Controller is mainly used in fire pump, domestic feed pump, hot water circulation pump, freezing (cooling) pump, drainage pump start and stop.

It can also be applied to a variety of load control such as motors.There are float switch,pressure switch, flow switch , liquid level relay,electric contact pressuregauge and electric contact temperaturemeter and other automatic control methods.

This product is suitable for motors with power below 11KW (AC contactor 40A).
Phase loss protection、Phase break protection、
Overload protection、Locked-rotor protection

Shape & Size drawing

Hole Size:145×83

Terminal description

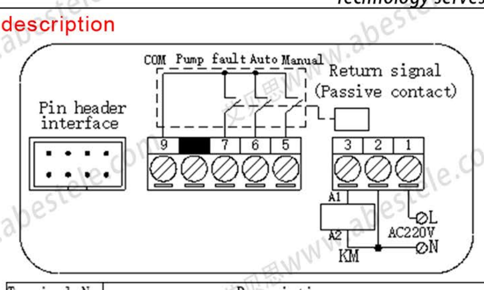

Terminal No.	Description
1	Working power supply AC220V Live line(L)
2	Working power supply AC220V Neutral line(N)
3	Contactor coil control terminal
4	●
5	Passive contact/Manual(ON)
6	Passive contact/Auto(ON)
7	Passive contact/Faulty(ON)
8	●
9	Common signal control terminal

Forced starting pump

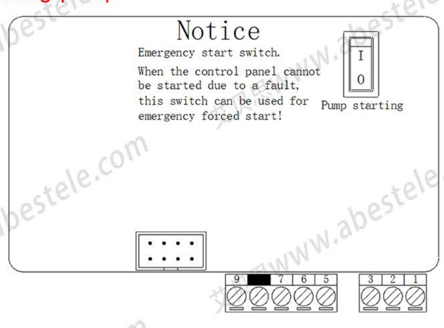

Parameter setting

Code	Factory default	Description
P01	8A	Rated current range 0～25A
P02	130	Overcurrent protection percentage range OFF 100～200% (OFF = Turn off protection)
P03	6S	Overcurrent protection duration 1 to 60S
P04	100%	Pump current coefficient correction range 50%～150%
P05	OFF	Undercurrent protection percentage range OFF 1～100% (OFF=Turn off protection)
P06	6S	Undercurrent protection duration 1～60S
P08	ON	Fault alarm sound ON= on OFF= off
P09	0	0=Basic mode 1=Fire mode (Fault does not stop the machine)
P10	9600	Communication baud rate 2400、4800、9600
P11	n81	Communication data format:n81、e81、o81
P12	1	Communication address range 1～247
P20	0	Enable or disable the inspection function 0=OFF 1=ON 1=ON Unit hour 2=ON Unit minute
P21	168	Inspection cycle range 1～720
P22	10S	Inspection working time range 3～120S

Output control terminal description

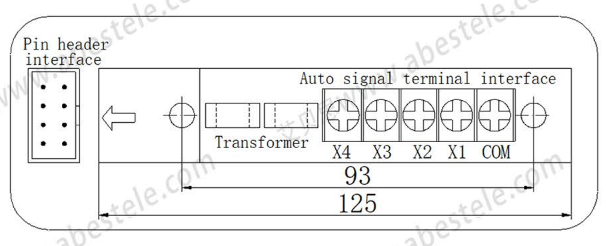

Pin header interface	Connecting flexible cable，the standard FC length is 50CM
Transformer	Pass through any two Live line(L) of the main control circuit respectively
Auto	COM:Common signal control terminal X1:ON:pump start,OFF: pump stop X2:ON:the ultra-high indicator light up and the buzzer alarm X3:Electric contact pressure gauge (Electric contact temperature meter) lower limit start pump X4:Electric contact pressure gauge (Electric contact temperature meter) upper limit stop pump Note:Click X3# to start,click X4# to stop

Rated current and running current display

Click Set

Rated current indicator On:Setting current display
Running current indicator On:Running current display

Control Key

Set	Setting parameters and parameter values, switch and view the rated current and running current
Save	Save the modified parameter values and exit the setting
Manual	Manual mode selection, parameter code increment, parameter value increment
Auto	Auto mode selection, parameter code decrement, parameter value decrement
start	Start key of the pump in manual mode
stop	Stop key of the pump in manual mode

Indicator

●Rated current	Indicator ON: setting current display
●Running current	Indicator ON: running current display
●Power	Indicator blink on:the controller is powered on
●Inspection	Indicator blink on:the inspection timing function is enabled. OFF:The inspection is closed
●Running	Indicator ON:pump working
●Fault	Indicator ON:pump faulty
●Fire	Indicator ON: in the fire fighting mode, fault does not stop the machine
●Ultra-high	Indicator ON: Ultra-high water level (overflow level)
●Manual	Indicator ON: in manual mode
●Auto	Indicator ON: in Auto mode

Parameter code setting

Long press Set to enter the parameter code display,

click Manual or Auto to select the parameter code you want to modify (Long press for quick selection).

If no need to modify, click Save and exit the parameter code setting at any time

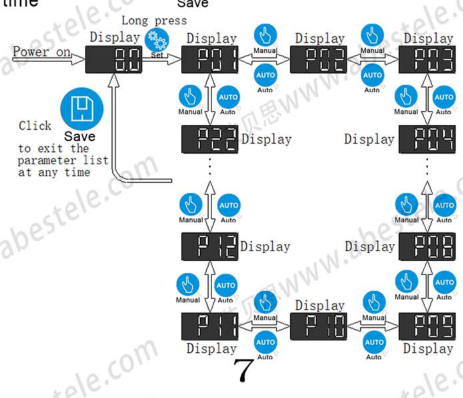

Parameter value modification

Take the modification of rated current (Code P01) as an example:

Long press Set to enter the parameter code display,then click Set to enter the parameter value,

click Manual or Auto to select the parameter code you want to modify (Long press for quick selection).
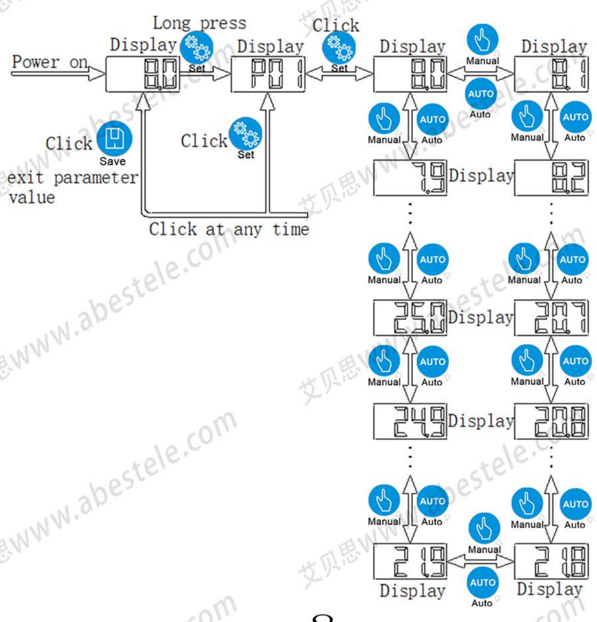
Modified, click Save save & exit the parameter value setting at any time